UNIVERSITY OF MIAMI

UM ASME – Electrical Preliminary Design Review

Agenda

1. Responsibilities and Main goals
2. Last Year System and Proposed Changes
3. Design Overview

UNIVERSITY OF MIAMI

Electrical Objectives

Our main Objectives are:

1. Design an effective electrical system with high reliability, minimal points of failure, and redundancies while keeping it simple with minimal components and maximum efficiency.
2. Work closely with software and mechanical sub teams to achieve project goals.
3. Focus on real-time data logging of current, voltage, power, temperature, and speed for post-analysis and future optimization.
4. Reduce wiring complexity by using multiplexed communication protocols.
5. Ensure reliable wired communication and power distribution to motors and other subsystems.

Last Year's system

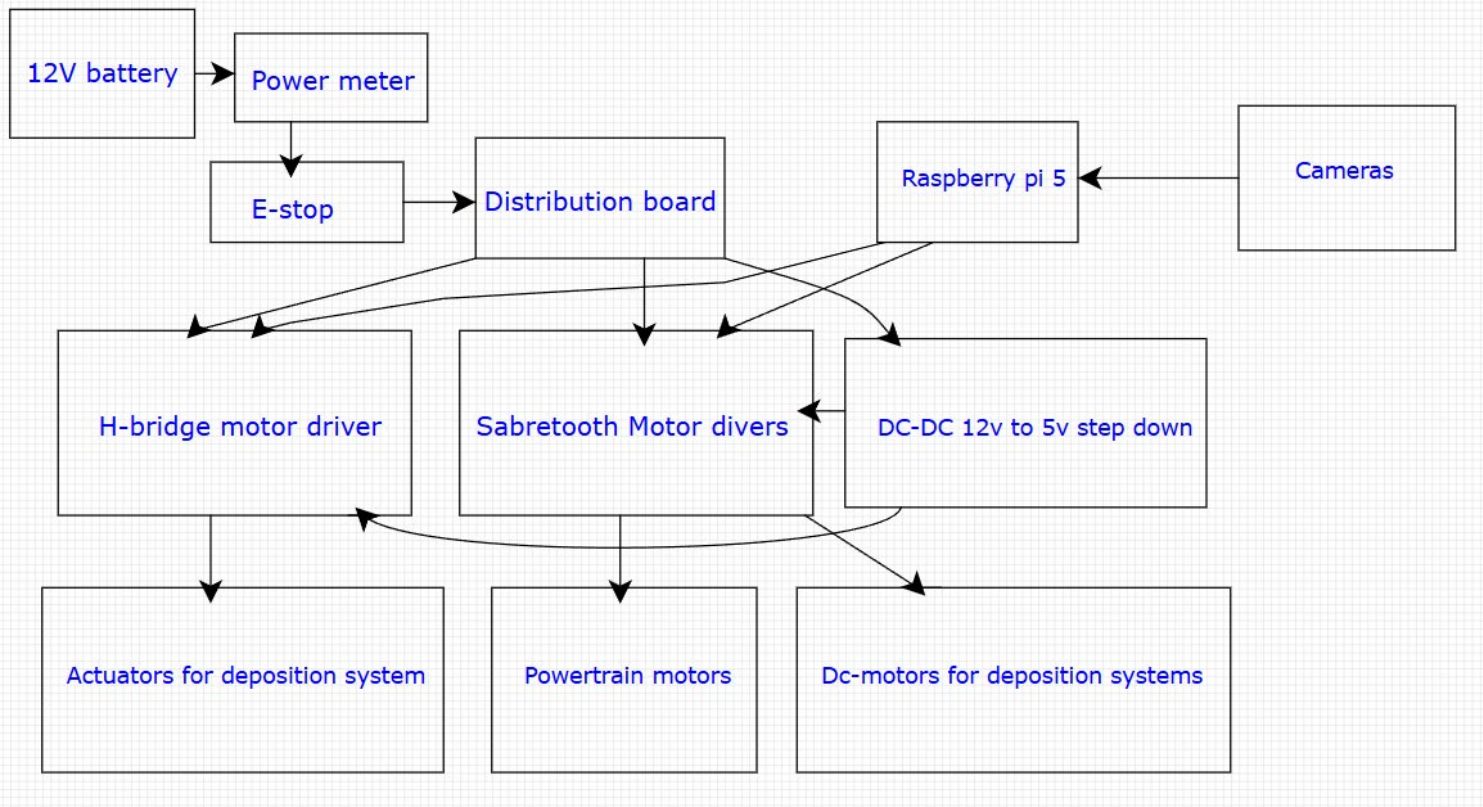

Last Year's system: Challenges and Proposed Changes

CAN Bus Interface:

Challenge

- Logic-level voltage incompatibility between the **MCP2515 CAN module** and the **microcontroller**

Solution

- Replaced **MCP2515** with **MCP2518FD**
- Utilized the **built-in CAN controller** of the **Teensy**
- Used **CAN-to-USB** for communication with the **main computer (Jetson Nano)** via **SocketCAN**
- Integrated **TJA1051T/3 (Adafruit)** CAN transceiver
  - Includes a **built-in logic level shifter**
  - Ensures reliable voltage compatibility with the CAN bus

TJA1051T/3 (Adafruit)

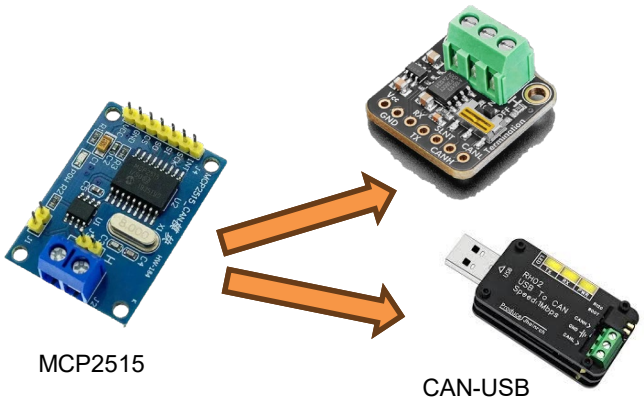

MCP2515

CAN-USB

The Same VCC feeding the transceiver

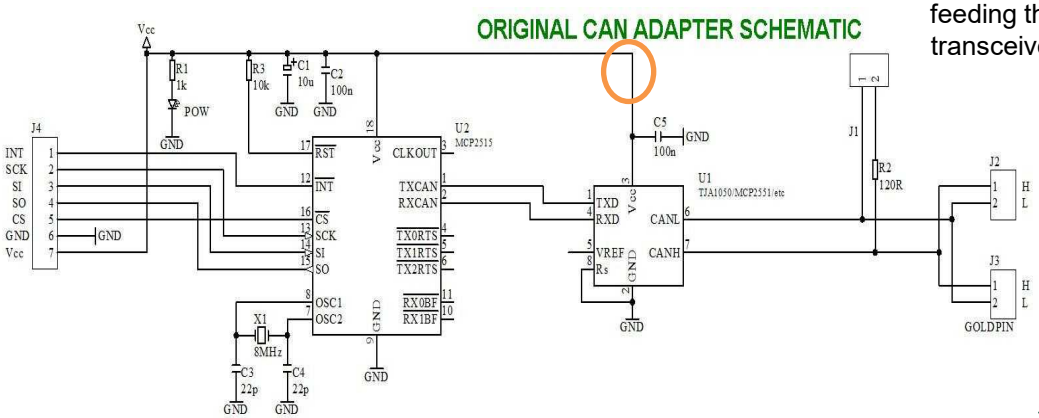

UNIVERSITY OF MIAMI

Last Year's system: Challenges and Proposed Changes

Drivetrain motors:

Challenge

- Previous DC motors were **heavy**, **inefficient**, and lacked **encoders** for motion feedback

Solution

- Replaced CIM DC motors with REV Robotics BLDC 1.1V.

Key Advantages

- **~60% weight reduction**
- **~10% higher efficiency**
- **Built-in encoder** for precise speed and position feedback
- **CAN bus communication**
- **Integrated PID control** within the motor controller
- **Smaller physical footprint**

CIM DC motor

BLDC Rev robotics NEO 1.1V

Last Year's system: Challenges and Proposed Changes BLDC motors

The main issue we are facing is controlling the BLDC motors with CAN bus system. This includes reverse engineering the CAN addresses control and heartbeat signals. We could find the documentation which outlines the addresses for each functionality inside this motor controller as you see below
The team could successfully control the motors

Implemented?	Command Name	Description	extId	Device Type	Manufacturer	API Class	API Index	API	Mask	Device ID	Data IN Length	Data[0]	Data[1]	Data[2]	Data[3]	Data[4]	Data[5]	Data[6]	Data[7]
Yes	Broadcast Disable	Device shall disable immediately when this meesage is recieved	0000000	deviceBroadcast	broadcast	0	0	0x00	0	ALL (ignored)									
Partial	Broadcast System Halt	Upon receiving this message the motor controller will stop driving the motor and go to a neutral state. The motor can not be driven again until either a System Reset or System Resume has been received.	0000040	deviceBroadcast	broadcast	0	1	0x01	64	Individual Device									
Yes	Setpoint Set	Run the currently set control mode	2050040	motorController	REV	0	1	0x01	33882176	Individual Device	8	Target[0]	Target[1]	Target[2]	Target[3]	Aux[0]	Aux[1]	[7:3]Reserved [2] ArbFF Units pidSlot[1:0]	rsvd
Yes	Duty Cycle Set	This command is used to set the output duty cycle of the motor controller in duty cycle control mode. The first parameter is a 32-bit IEEE floating point number that specifies the output duty cycle and direction. Valid range for this control mode are [-1 1].	2050080	motorController	REV	0	2	0x02	33882240	Individual Device	8	Target[0]	Target[1]	Target[2]	Target[3]	Aux[0]	Aux[1]	[7:3]Reserved [2] ArbFF Units pidSlot[1:0]	rsvd
Yes	Speed Set	Sets the closed loop speed controller, unit is 32-bit IEEE floating point number representing the target speed in RPM	2050480	motorController	REV	1	2	0x12	33883264	Individual Device	8	Target[0]	Target[1]	Target[2]	Target[3]	Aux[0]	Aux[1]	[7:3]Reserved [2] ArbFF Units pidSlot[1:0]	rsvd
Yes	Smart Velocity Set	Sets the closed loop speed controller, unit is 32-bit IEEE floating point number representing the target speed in RPM. Honors the max acceleration and max velocity from the Smart Motion parameters	20504C0	motorController	REV	1	3	0x13	33883328	Individual Device	8	Target[0]	Target[1]	Target[2]	Target[3]	Aux[0]	Aux[1]	[7:3]Reserved [2] ArbFF Units pidSlot[1:0]	rsvd
Yes	Position Set	Sets the closed loop speed controller, unit is 32-bit IEEE floating point number representing the target position in rotations	2050C80	motorController	REV	3	2	0x32	33885312	Individual Device	8	Target[0]	Target[1]	Target[2]	Target[3]	Aux[0]	Aux[1]	[7:3]Reserved [2] ArbFF Units pidSlot[1:0]	rsvd
Yes	Voltage Set	Sets the closed loop speed controller, unit is 32-bit IEEE floating point number representing the target voltage in volts.	2051080	motorController	REV	4	2	0x42	33886336	Individual Device	8	Target[0]	Target[1]	Target[2]	Target[3]	Aux[0]	Aux[1]	[7:3]Reserved [2] ArbFF Units pidSlot[1:0]	rsvd
Yes	Current Set	Sets the closed loop speed controller, unit is 32-bit IEEE floating point number representing the target current in Amps.	20510C0	motorController	REV	4	3	0x43	33886400	Individual Device	8	Target[0]	Target[1]	Target[2]	Target[3]	Aux[0]	Aux[1]	[7:3]Reserved [2] ArbFF Units pidSlot[1:0]	rsvd
Yes	Smart Motion Set	Sets the closed loop smart motion controller, unit is 32-bit IEEE floating point representing the target position in rotations.	2051480	motorController	REV	5	2	0x52	33887360	Individual Device	8	Target[0]	Target[1]	Target[2]	Target[3]	Aux[0]	Aux[1]	[7:3]Reserved [2] ArbFF Units pidSlot[1:0]	rsvd

Last Year's system: Challenges and Proposed Changes: BLDC motor

In addition, we could find a library that works with SocketCAN for linux, we can control them from Jetson nano

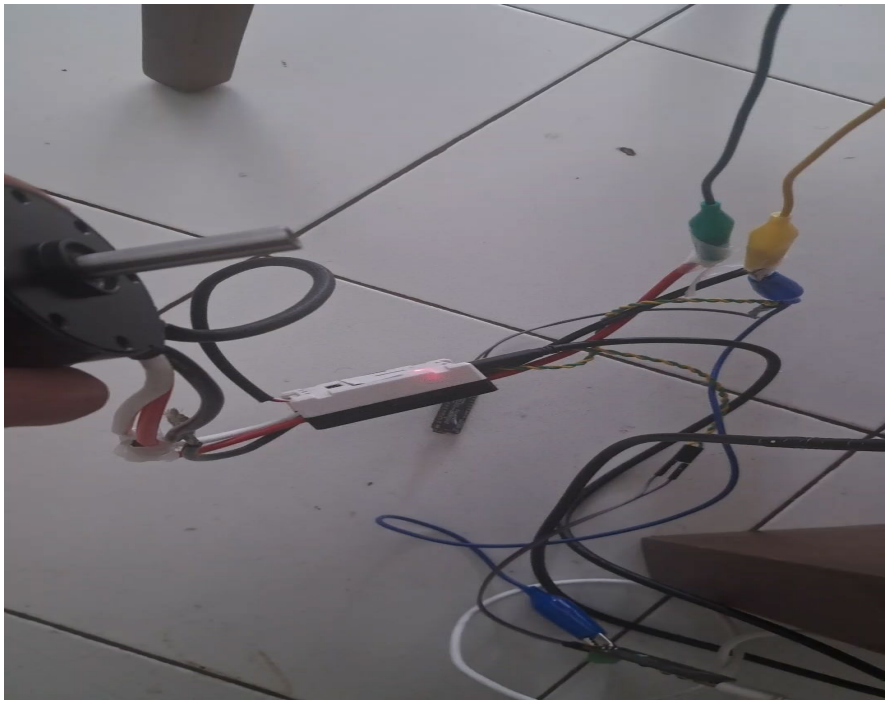

```
#define HEARTBEAT_ID 0x2052C80 // heartbeat is importnat to keep the Controller responsing
#define SPEED_SET_ID 0x2050480 // Set speed CAN ID

const uint8_t HEARTBEAT_DATA[8] = {
  255, 255, 255, 255, 255, 255, 255, 255
};
```

UNIVERSITY OF MIAMI

Last Year's system: Challenges and Proposed Changes

Deposition Motor:

Challenge

- Previous DC motor lacked **encoders** for motion feedback

Solution

- Replaced with the same motor with Encoders.

Last Year's system: Challenges and Proposed Changes

Batteries :

Challenge
Previous **$LiFePO_4$ batteries** suffered from:
•**Low energy density**
•**Limited discharge current**, restricting motor performance

Solution
Replaced $LiFePO_4$ batteries with **LiPo (Lithium-Polymer) drone batteries**

Key Advantages
- **50%–80% higher energy density**
- **~50% faster charging time**
- **Extremely high discharge rate (high C-rating)**
  → Supports high motor current demand and rapid acceleration

Li-Ion battery

BLDC Rev robotics NEO 1.1V

Electrical Architecture

1. High-Current Power Subsystem
Handles power generation and distribution for high-load components. It includes:
- Battery
- Power Distribution Board (PDB)
- Fuses and protection circuitry
- DC-DC converters.

2. Low-Voltage Control Subsystem
Responsible for system intelligence, control, and communication. It includes:
- Microcontroller
- Control board
- All control logic and internal communication within the system

3. Electrical Interconnects & Enclosure Subsystem
Provides mechanical protection and reliable electrical connectivity. It includes:
- Electrical harnesses
- Electrical connectors
- Electrical enclosure (electrical box)

Electrical Architecture: High-Current Power Subsystem

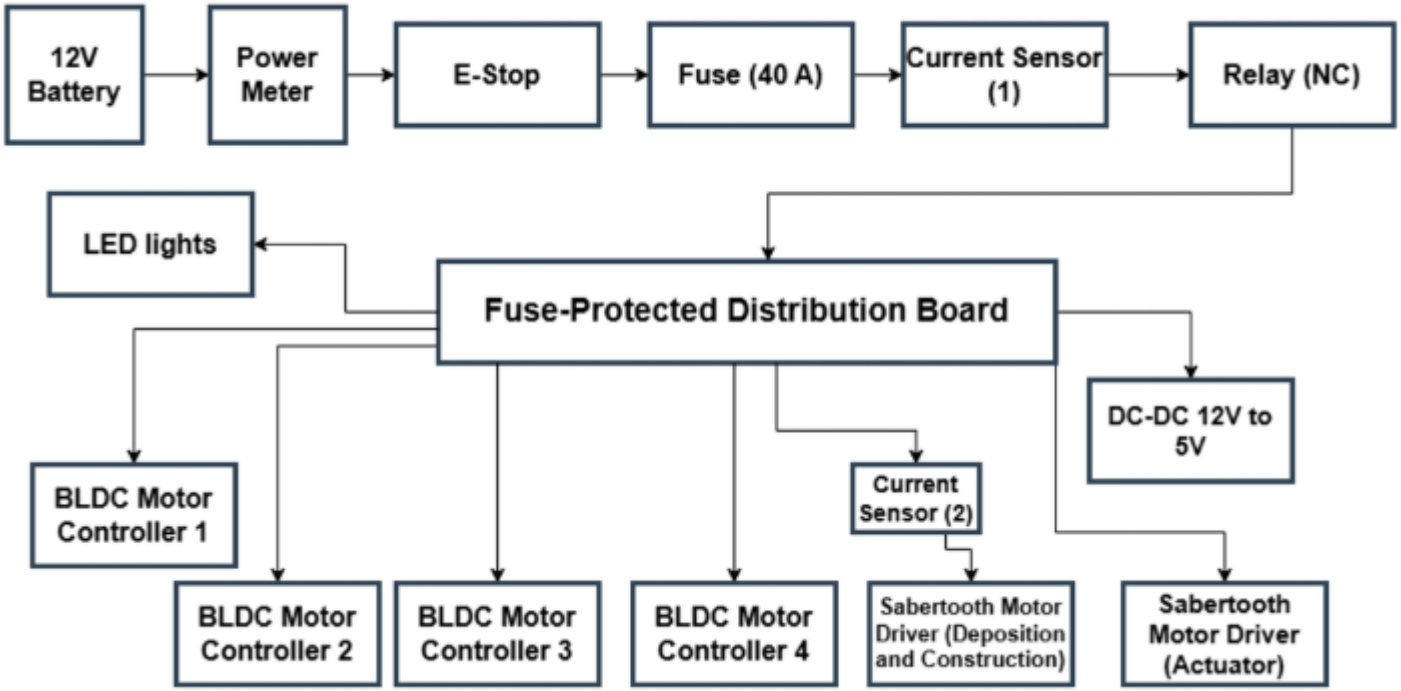

Electrical Architecture: High-Current Power Subsystem: PDB

Power Distribution Board (PDB) — Main Functionalities

- Handles up to **40 A peak current** during startup and transient conditions
- Provides **7 high-current outputs + 1 dedicated DC-DC converter output**
- **Fuse protection** on each power bus
- **Main bus current sensing**
- **integrated DC-DC buck converter 5V/5A**
- **Strictly follow the guidelines for the current IPC-2221/IPC-2152 for trace width and copper pour.**
- **Used the Power analysis tool in Altium to define the areas of high current densities**

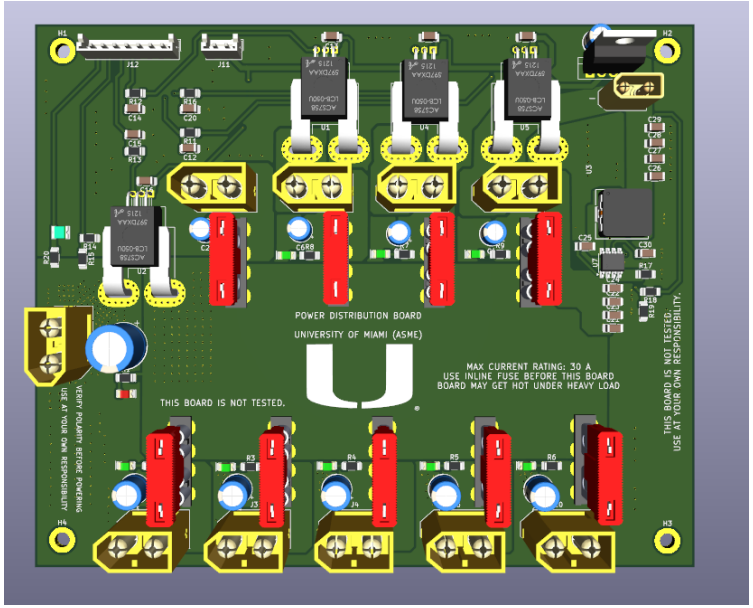

PDB: Schematics

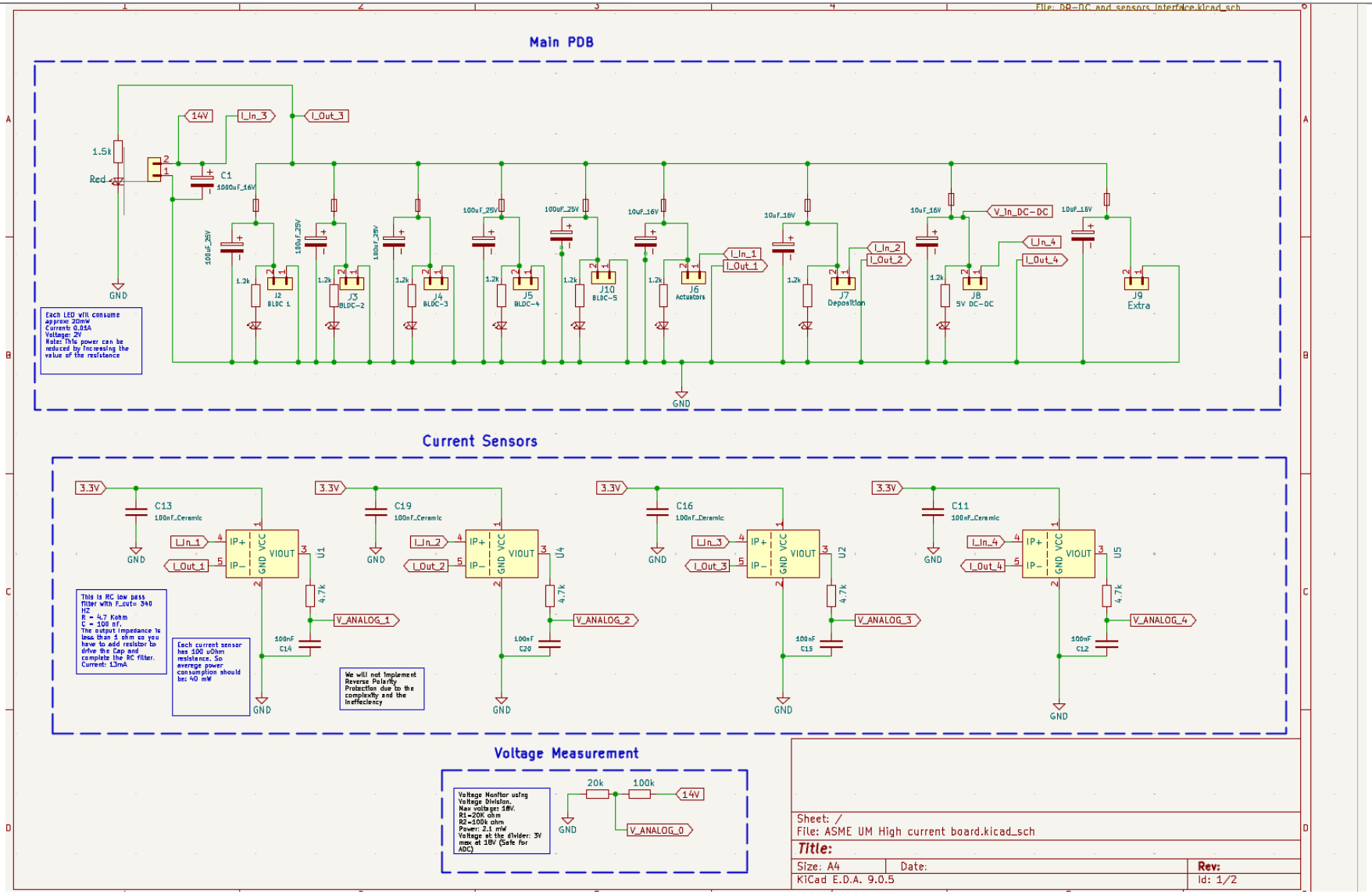

UNIVERSITY OF MIAMI

PDB: Schematics: Continued

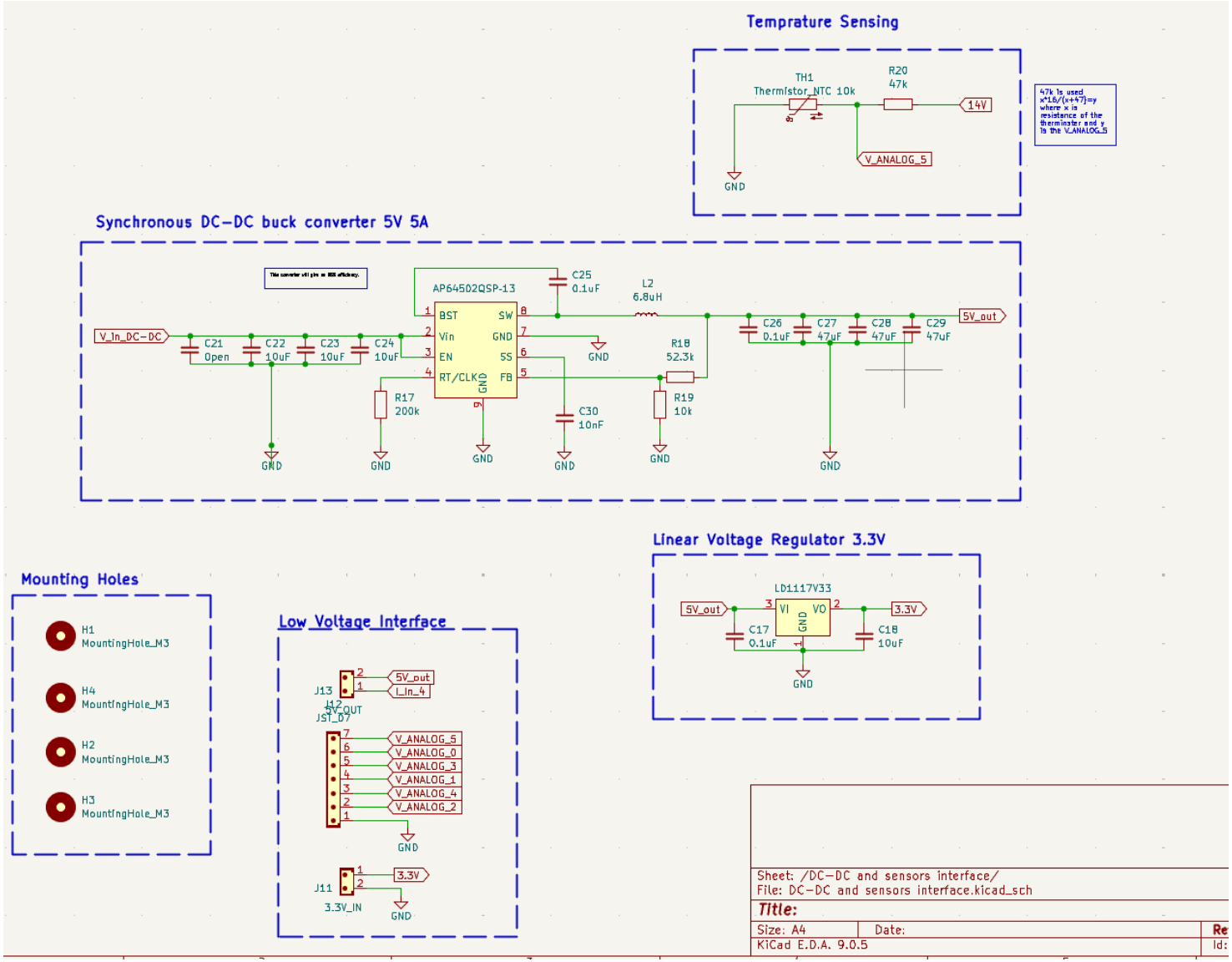

UNIVERSITY
OF MIAMI

PDB: PCB Continued

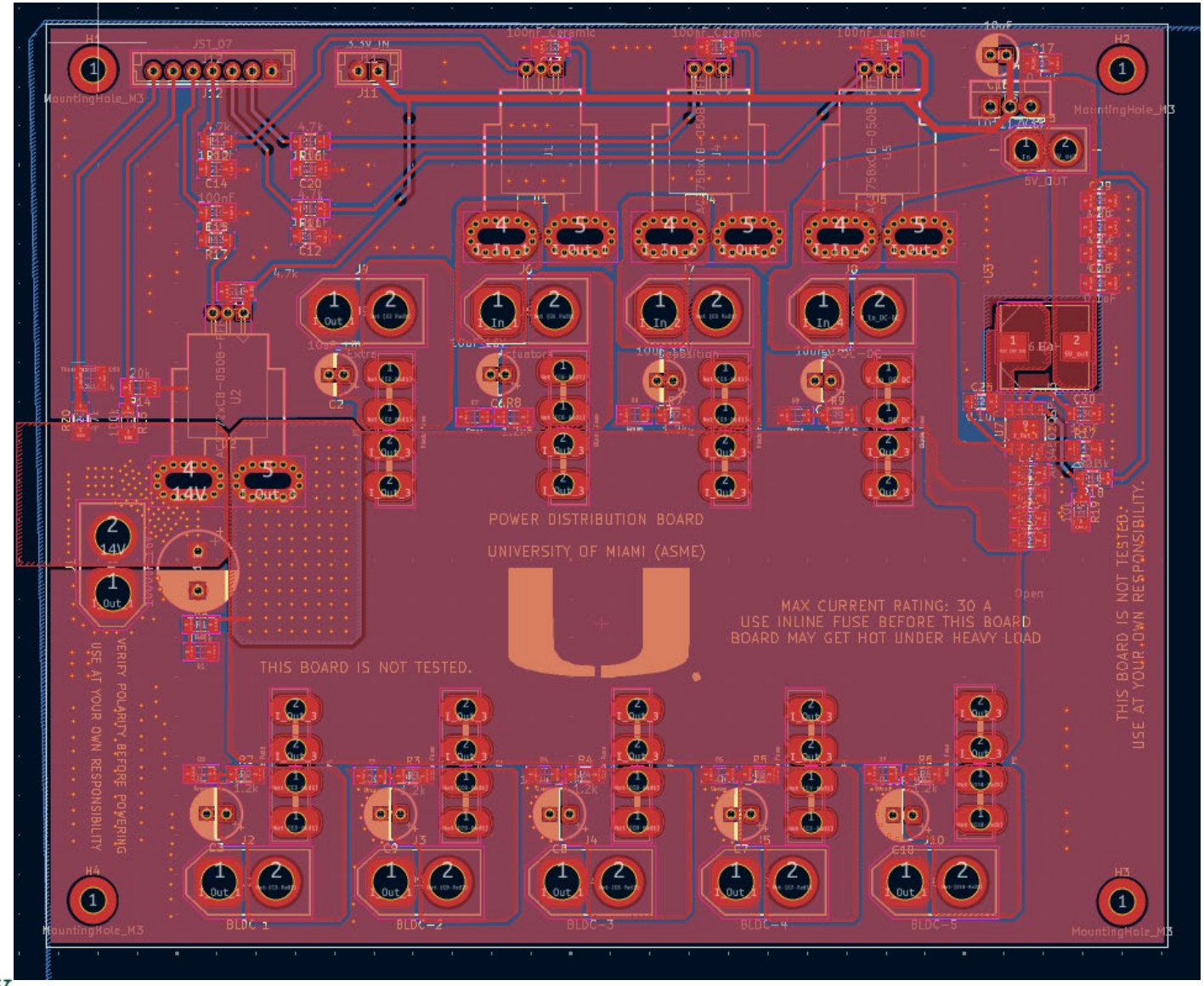

UNIVERSITY
OF MIAMI

PDB: PCB Continued

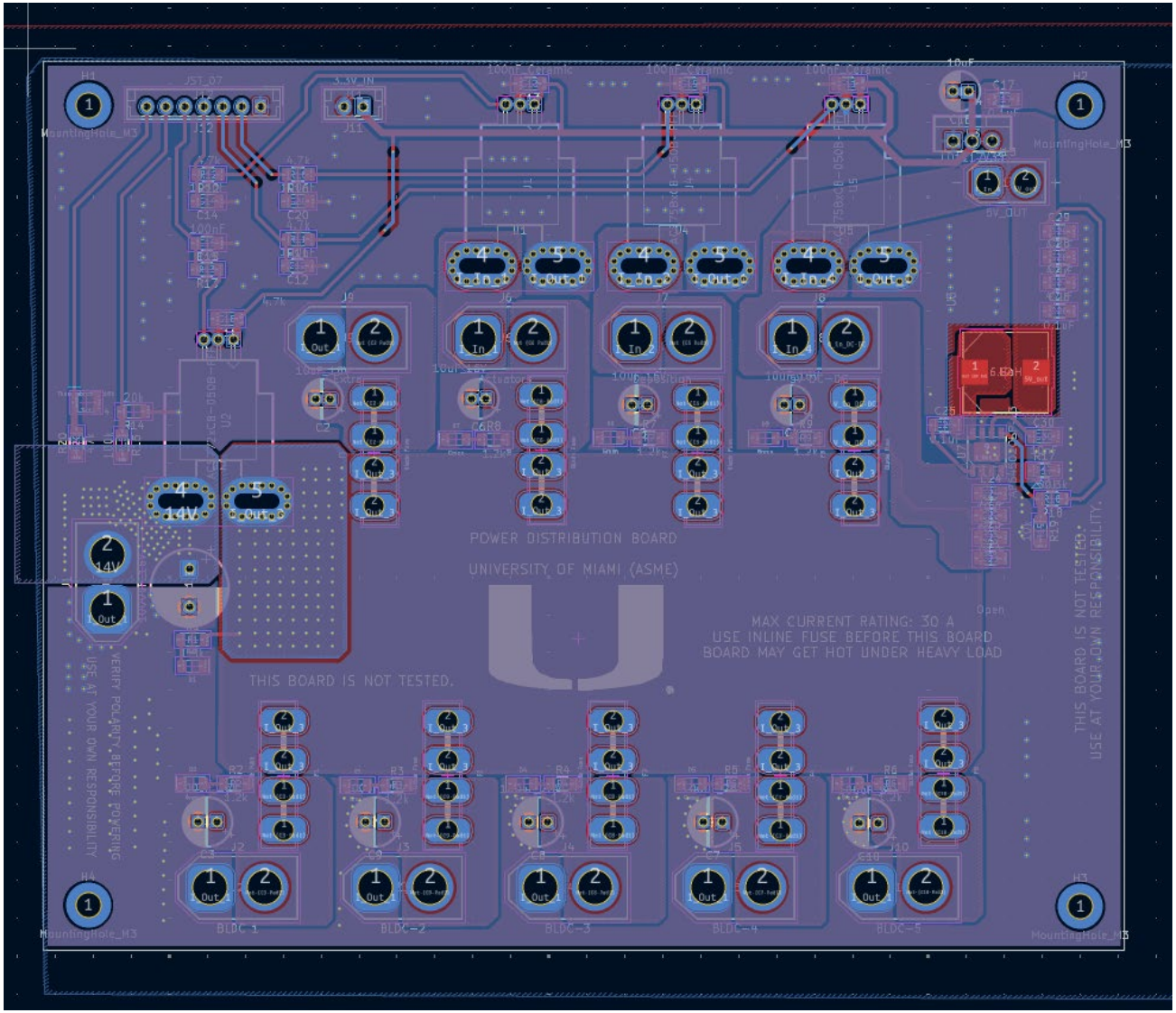

UNIVERSITY
OF MIAMI

PDB: PCB Continued

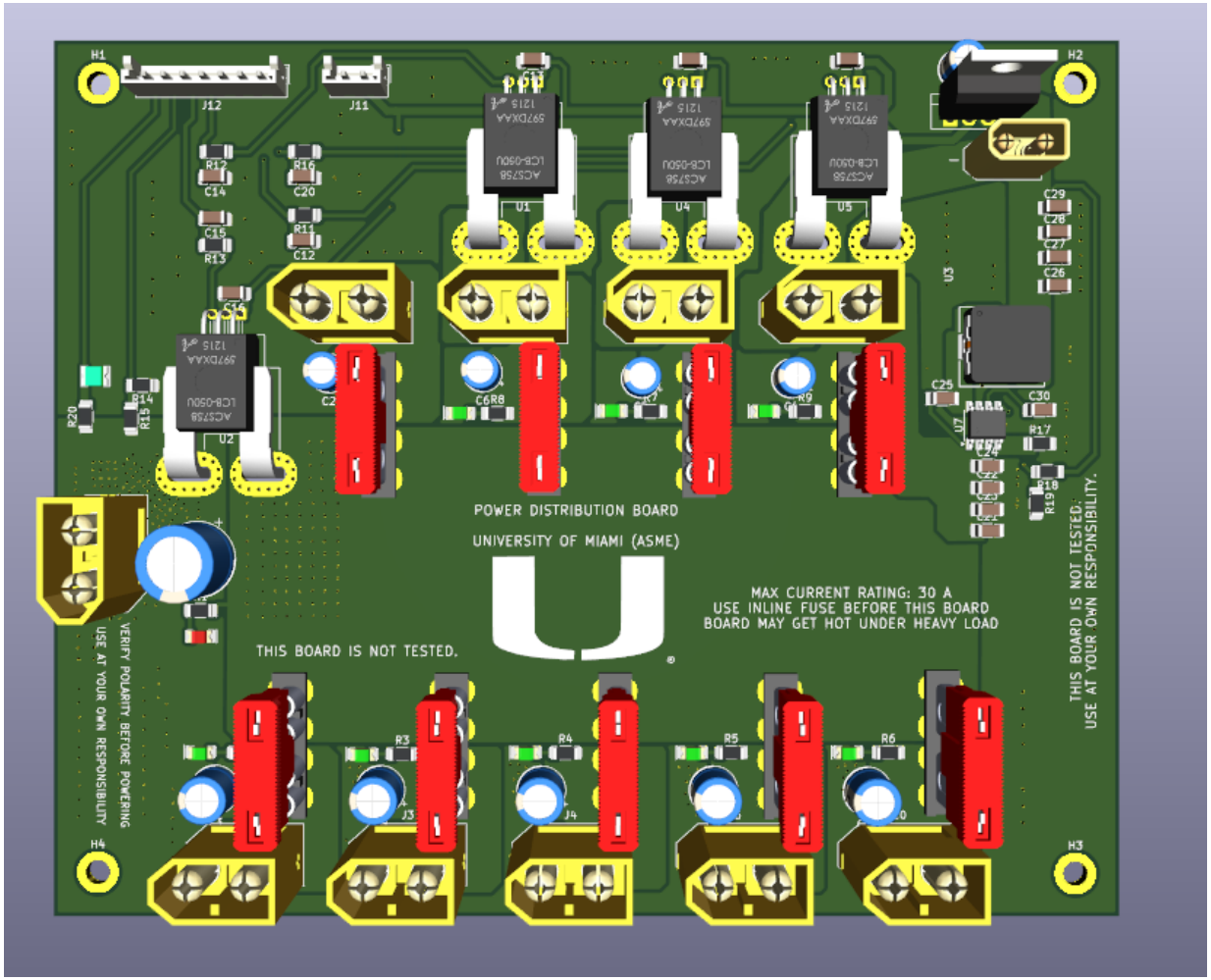

PDB: PCB Continued

Before Optimization

- Several **high-current hotspots** (red/yellow regions) observed
- **Current crowding** at trace bottlenecks and sharp corners
- Uneven current distribution → potential **localized heating** and **voltage drops.**

After Optimization

- High-current hotspots **eliminated**
- **Current evenly distributed** across the plane
- Lower current density in critical areas → improved **thermal safety**

Achieved by:

- **Widening traces** in high-current regions
- **Adding copper pours/planes** for better distribution
- **Smoothing corners and removing bottlenecks**
- **Re-routing connections** for more uniform flow

Before Optimization

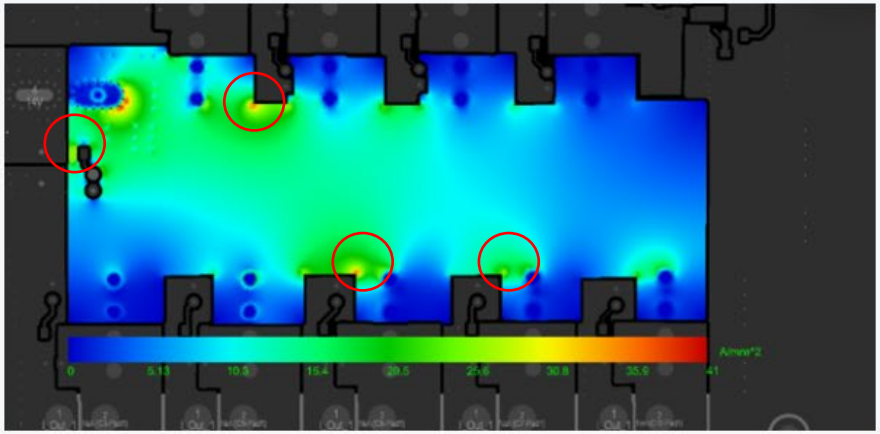

After Optimization

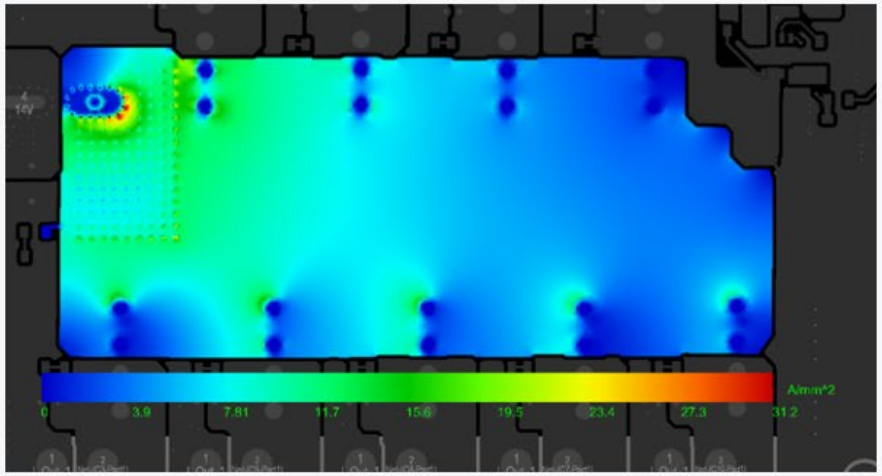

Electrical Architecture: Low Voltage/logic

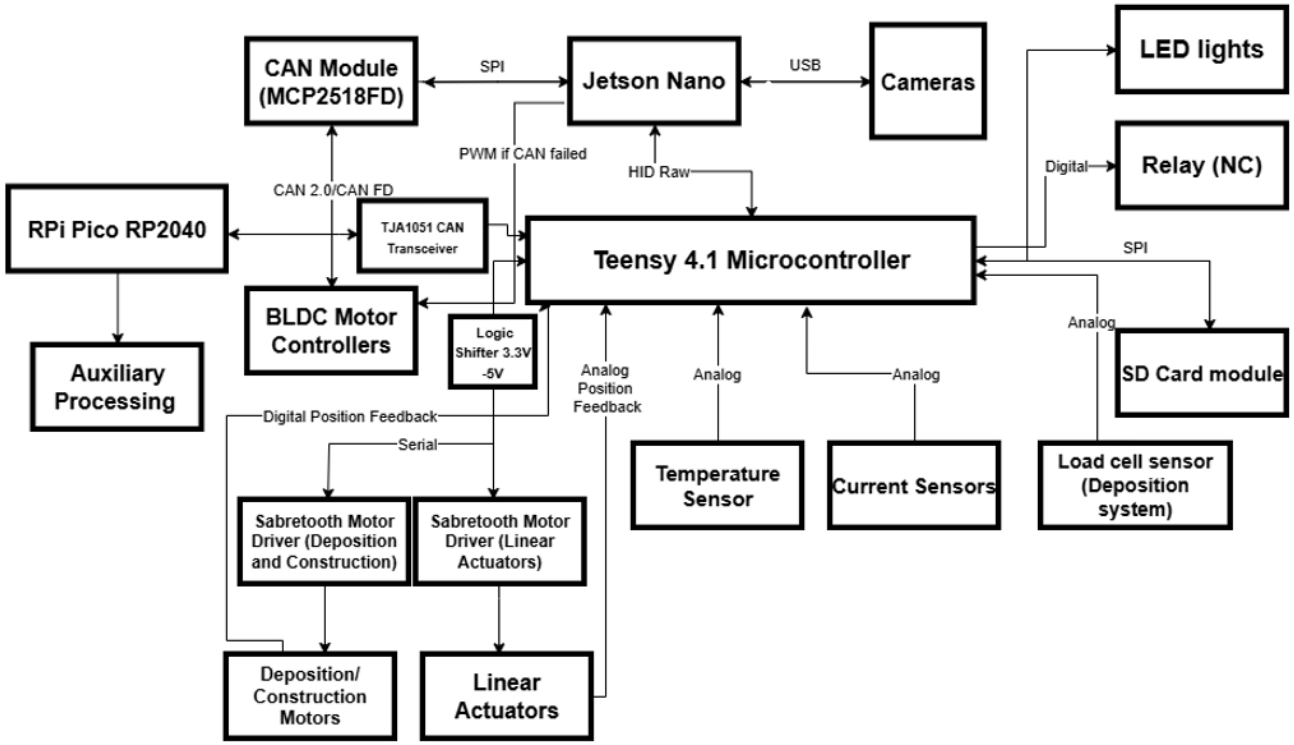

UNIVERSITY
OF MIAMI

Electrical Architecture: Low Voltage/logic

Main Functionalities of the control board are:

- Teensy 4.1 microcontroller with 5V input, regulated 3.3V output, and decoupling for stable operation.
- Supports I2C, SPI, CAN, and serial interfaces for sensors and Sabertooth motor drivers, with logic level shifting for 3.3V ↔ 5V signals.
- Interfaces for motor encoders, linear actuators, analog sensors, PWM outputs, interrupt pins, and LED.
- Standard JST connectors, four-layer PCB with two ground plane for low-EMI operation.
- Followed the **IPC-2221/IPC-2152** for trade width.

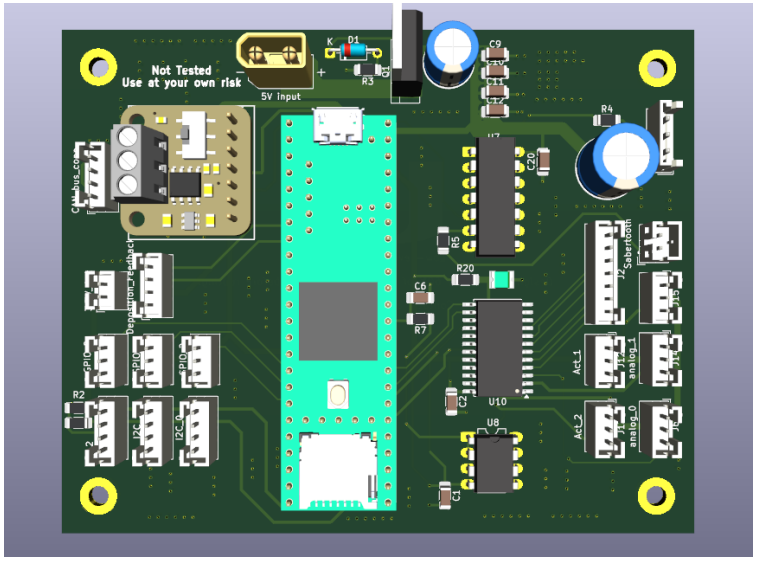

Control Board: Schematics

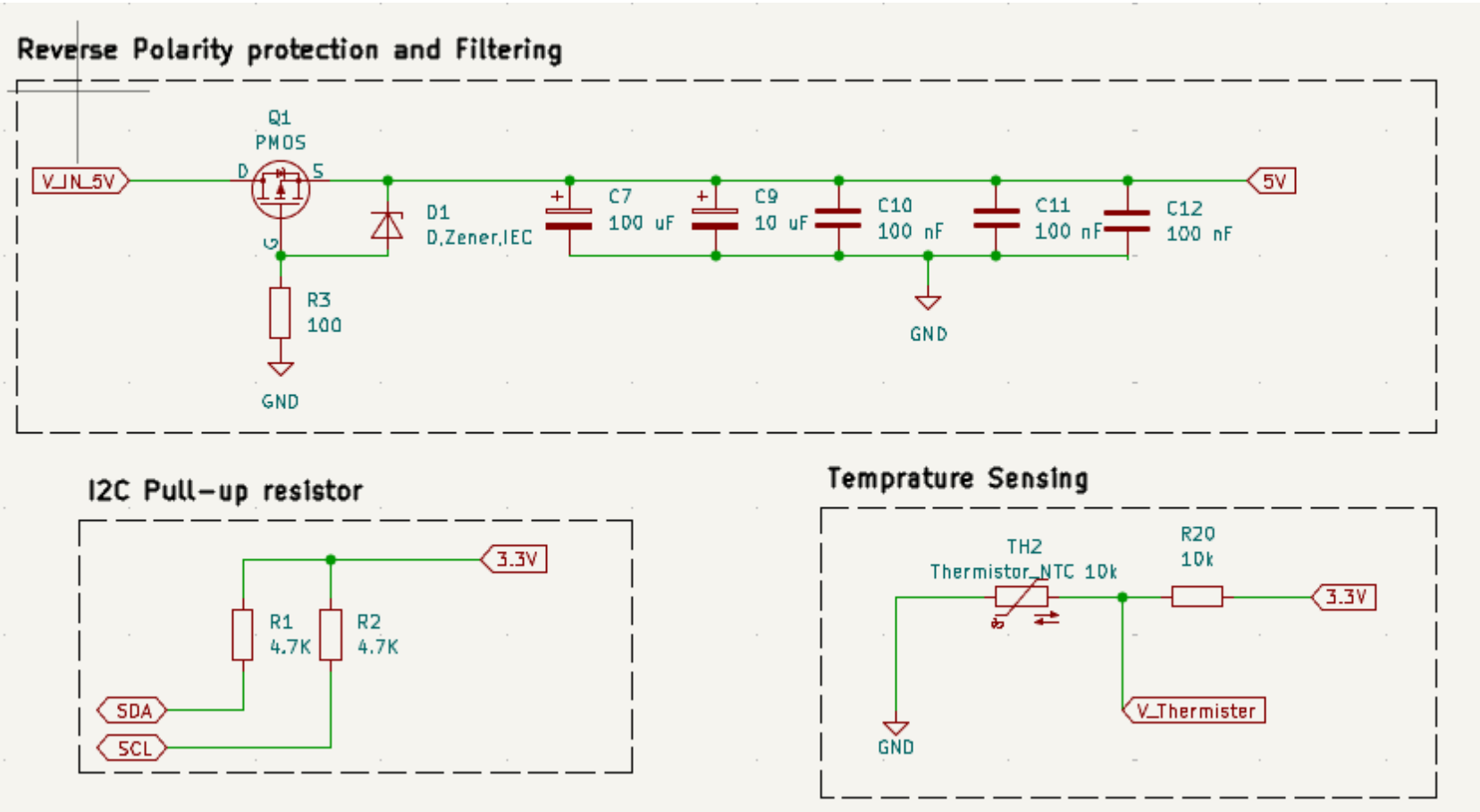

Control Board: Schematics

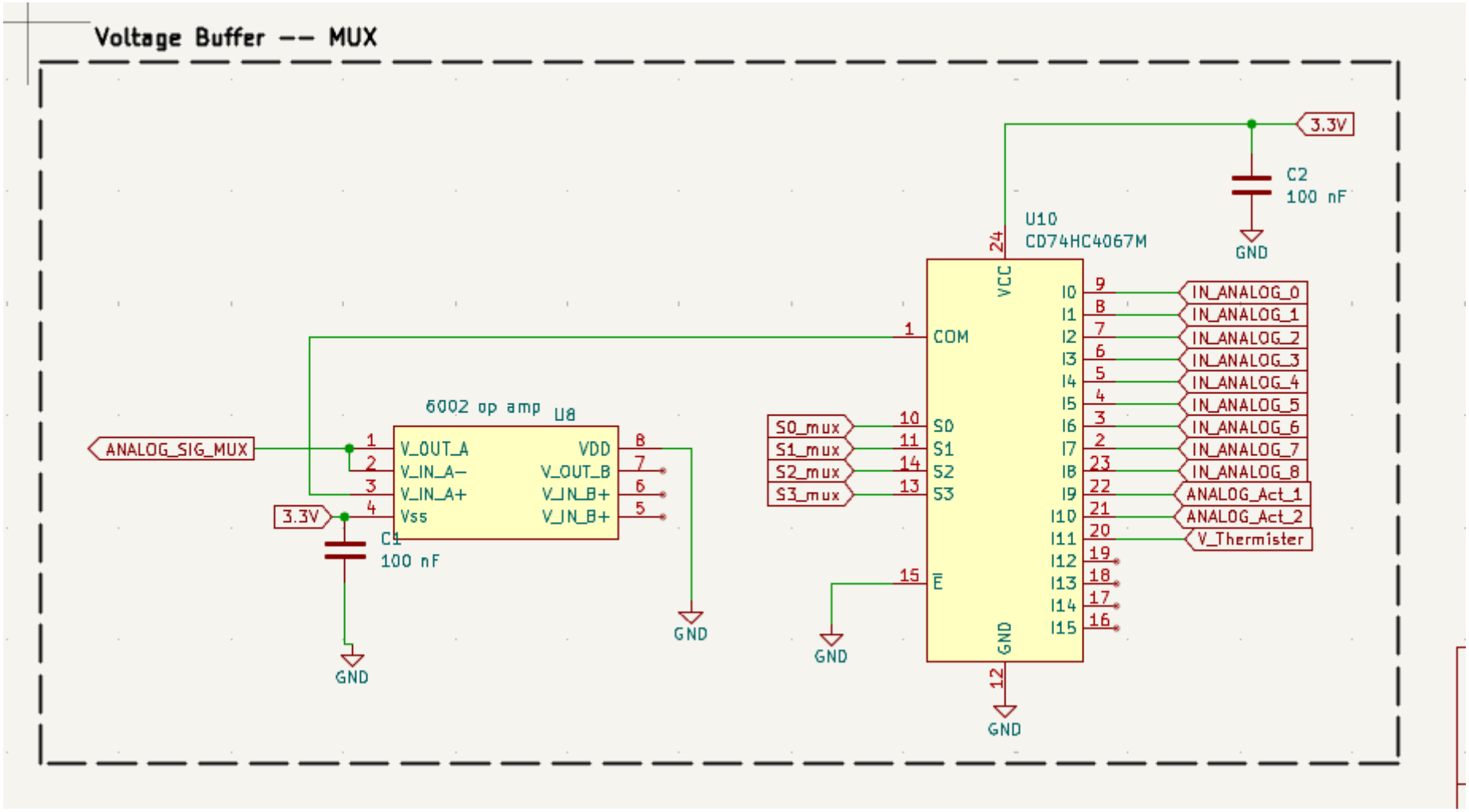

Control Board: Schematics

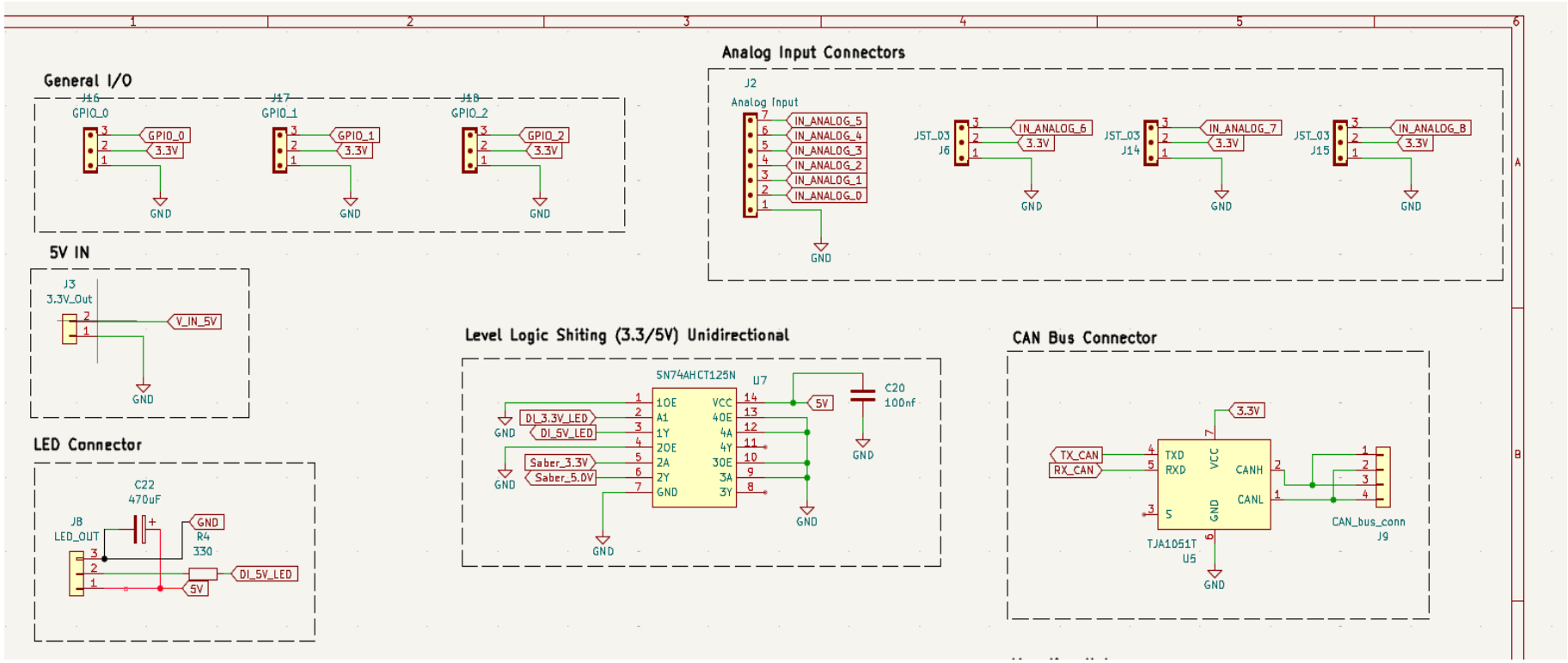

UNIVERSITY
OF MIAMI

Control Board: PCB

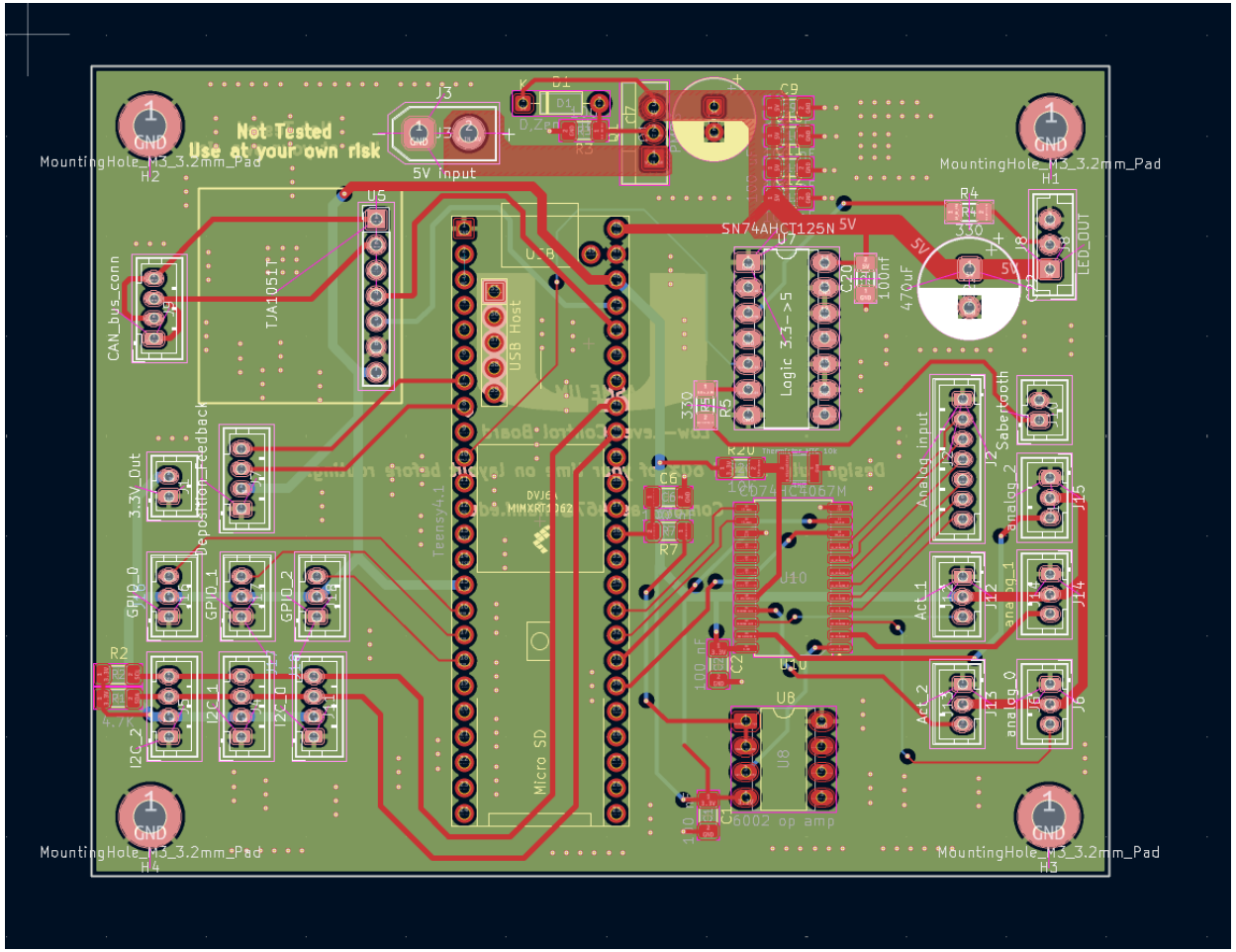

Control Board: PCB

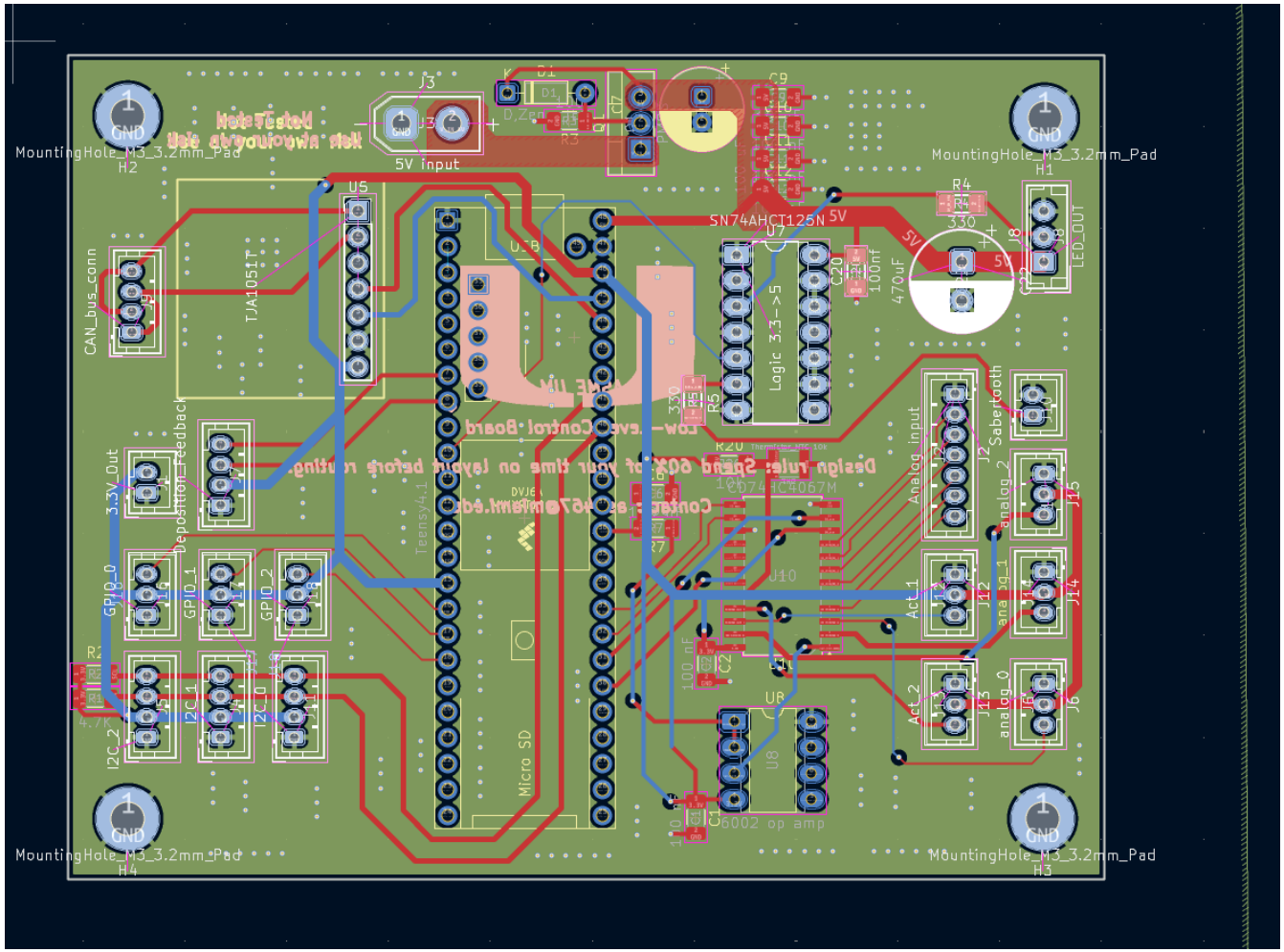

UNIVERSITY
OF MIAMI

Electrical harnesses and connectors

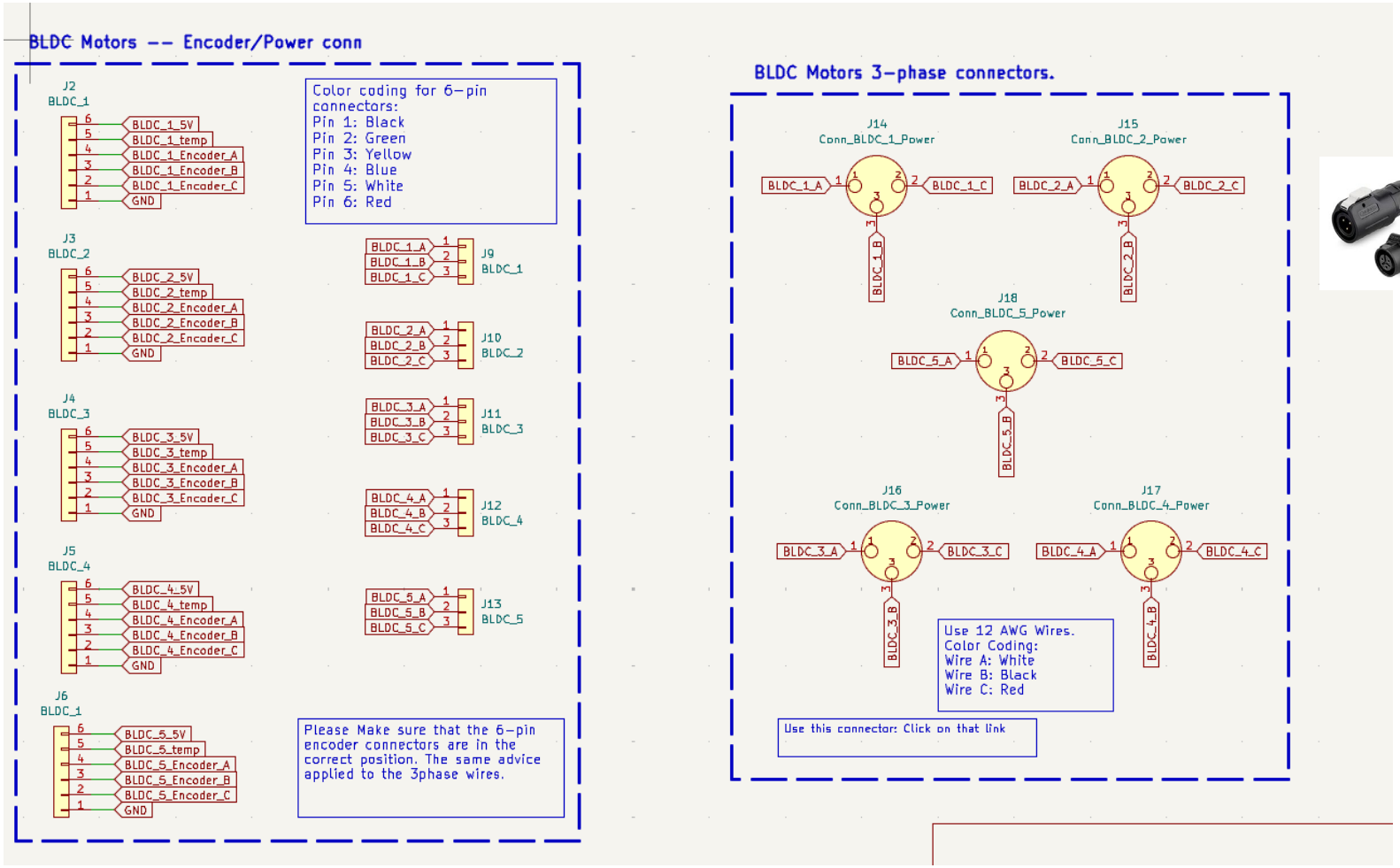

Electrical harnesses and connectors

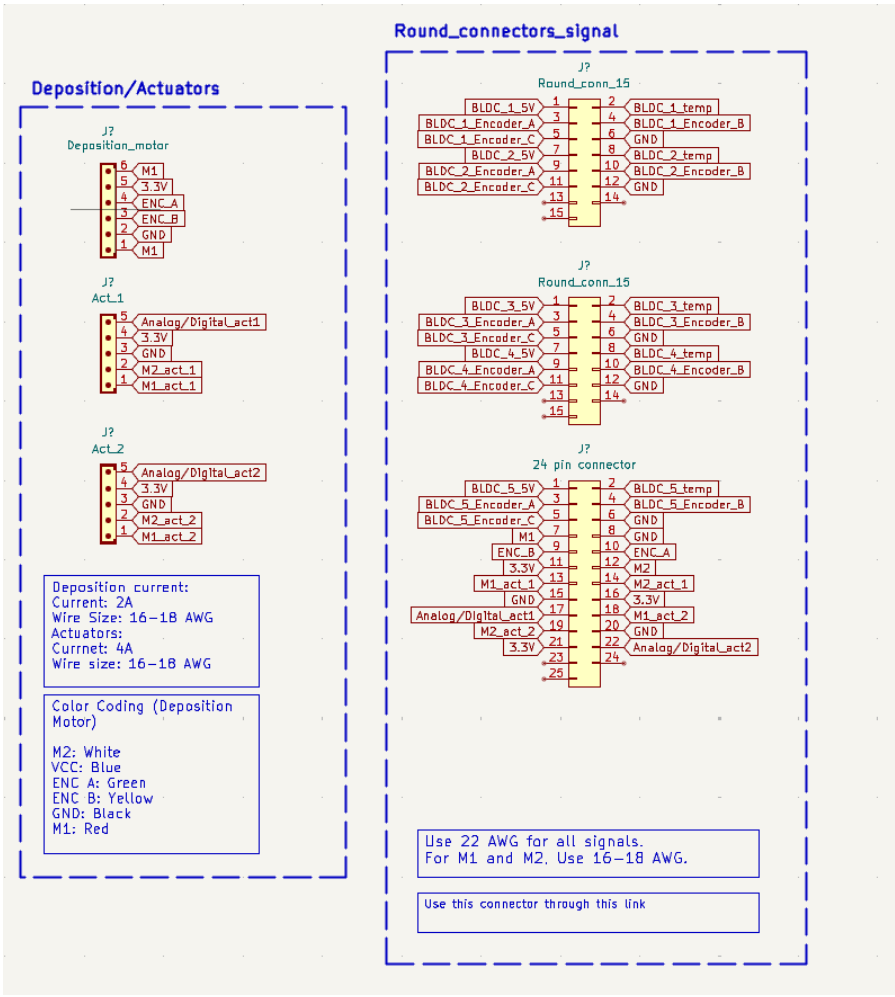

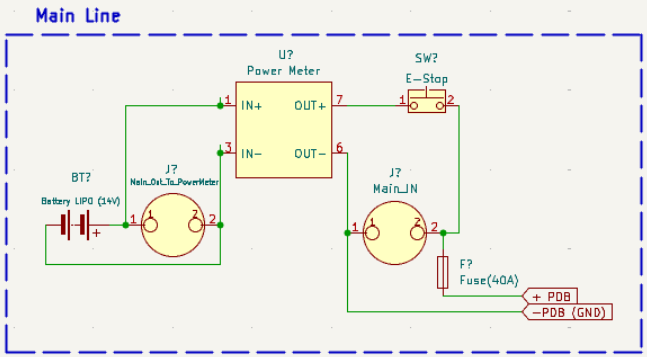

UNIVERSITY OF MIAMI

Electrical Enclosure

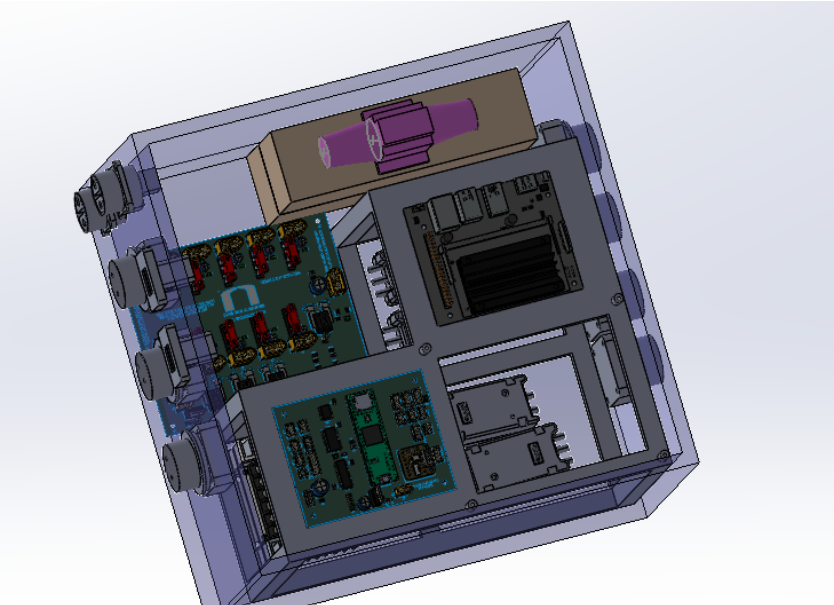

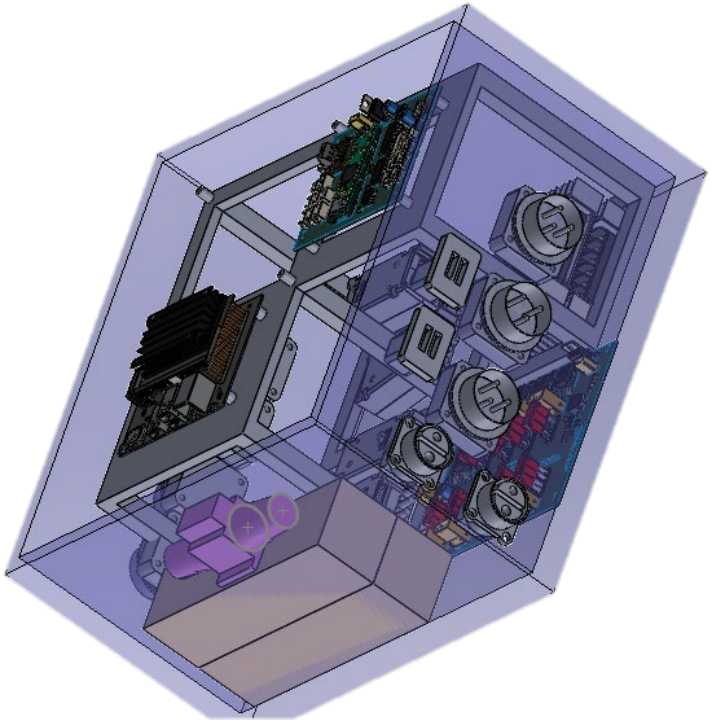

Thank You!